US008467981B2

(12) **United States Patent**
Mukherjee et al.

(10) **Patent No.: US 8,467,981 B2**
(45) **Date of Patent: Jun. 18, 2013**

(54) **NON-INVASIVE LIQUID LEVEL SENSING SYSTEM AND METHOD**

(75) Inventors: **Somnath Mukherjee**, Milpitas, CA (US); **Ajay Kumar Das**, Milpitas, CA (US)

(73) Assignee: **Fluid Management Systems, Inc.**, Lexington, KY (US)

(*) Notice: Subject to any disclaimer, the term of this patent is extended or adjusted under 35 U.S.C. 154(b) by 442 days.

(21) Appl. No.: **12/772,613**

(22) Filed: **May 3, 2010**

(65) **Prior Publication Data**

US 2010/0280771 A1 Nov. 4, 2010

Related U.S. Application Data

(60) Provisional application No. 61/215,281, filed on May 4, 2009.

(51) **Int. Cl.**
G01F 23/00 (2006.01)

(52) **U.S. Cl.**
USPC **702/55**

(58) **Field of Classification Search**
USPC 702/55, 182–185, 188
See application file for complete search history.

(56) **References Cited**

U.S. PATENT DOCUMENTS

2,354,964	A	8/1944	Ostermann et al.
4,044,354	A	8/1977	Bosher et al.
4,099,167	A	7/1978	Pomerantz et al.
4,201,085	A	5/1980	Larson
4,489,601	A	12/1984	Rao et al.
4,495,807	A	1/1985	Field et al.
4,956,560	A	9/1990	Smith, Jr. et al.
5,275,951	A	1/1994	Chow et al.
5,423,206	A	6/1995	Hetzel
5,437,184	A	8/1995	Shillady
5,583,544	A	12/1996	Stamer et al.
5,609,059	A	3/1997	McEwan
5,797,515	A	8/1998	Liff et al.
5,880,364	A	3/1999	Dam
6,039,467	A	3/2000	Holmes

(Continued)

FOREIGN PATENT DOCUMENTS

DE	3633086(A1)	6/1987
JP	8313326(A)	11/1996

OTHER PUBLICATIONS

Spratt, W.K.; Vetelino, J.F., Torsional Acoustic Waveguide Sensor for Temperature and Liquid Level, Frequendy Control Symposium, 2009, Apr. 20-24, 2009, pp. 850-854.

(Continued)

Primary Examiner — Edward Raymond
(74) *Attorney, Agent, or Firm* — King & Schlickli, PLLC

(57) **ABSTRACT**

A non-invasive liquid level sensing system for monitoring the amount of liquid in at least one container includes a platform for supporting the at least one container, at least one holder associated with the at least one container supported by the platform, a source for generating a radio frequency signal, circuitry in communication with the at least one holder for transmitting the radio frequency signal through the at least one holder into the at least one container and receiving a portion of the radio frequency signal reflected at a liquid-air interface in the at least one container, and circuitry for processing the reflected radio frequency signal and determining the amount of liquid in the at least one container.

20 Claims, 10 Drawing Sheets

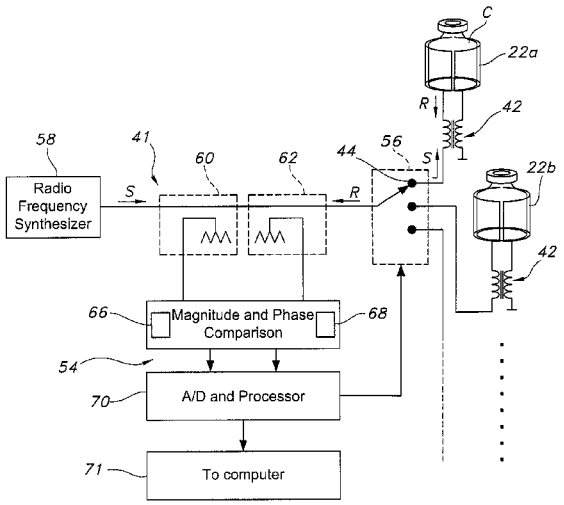

U.S. PATENT DOCUMENTS

6,474,156	B1	11/2002	Endo et al.	
6,546,795	B1	4/2003	Dietz	
6,564,658	B2	5/2003	Pchelnikov et al.	
6,822,618	B2	11/2004	Bisiules et al.	
6,959,598	B2	11/2005	Peterson et al.	
6,962,078	B2	11/2005	Angal et al.	
7,258,005	B2	8/2007	Nyce	
7,340,951	B2	3/2008	Nyce et al.	
7,458,260	B2	12/2008	Roesner	
2001/0015099	A1*	8/2001	Blaine	73/290 R
2007/0169549	A1	7/2007	Kwun et al.	
2008/0036829	A1	2/2008	Nishioka et al.	
2008/0105331	A1	5/2008	You et al.	
2008/0291435	A1	11/2008	Murakami	

OTHER PUBLICATIONS

Sanchez-Galicia, et al., Acoustic-Based Liquid Level Determination in Process Vessels Using PVDF Sensors, Instrumentation and Measurement Technology Conference, 2006, Apr. 24-27, 2006, pp. 1770-1773.

Yibo et al., Development of Magnetostriction Sensor for on-line Liquid Level and Density Measurement, Intelligent Control and Automation, 2006, vol. 1, pp. 5162-5166.

Royer, et al., A Liquid Level Sensor Using the Absorption of Guided Acoustic Waves, Ultrasonics, Ferroelectrics and Frequency Control., vol. 40, Iss. 4, Jul. '93, pp. 418-421.

James, et al., Enhanced Sensitivity Fibre Optic Long Period Grating Temperature Sensor, Optical Fiber Sensors Conference Technical Digest, 2002, vol. 1, pp. 139-142.

Guilin, et al., Fast Dynamic Liquid Level Sensor Based on Liquid Resistance, AFRICON 2007, Sep. 26-28, 2007, pp. 1-6.

Ilev, et al., All-Fiber-Optic Evanescent Liquid Level and Leak Sensor, Lasers and Electro-Optics, 1999, May 23-28, 1999, pp. 157-158.

Somnath Mukherjee; "Non-invasive Measurement of Liquid Content inside a Small Vial"; RWS '10 Proceedings of the 2010 IEEE Conference on Radio & Wireless Symposium; IEEE Press Piscataway, NJ, USA; pp. 527-530.

Dr. Somnath Mukherjee; "Non-Invasive Measurement of Liquid Content inside a Small Container", Oral Presentation; 2010 IEEE Radio Radio & Wireless Symposium, New Orleans, USA, Jan. 13, 2010; pp. 1-23.

D. P. Seliskar, et al.; "Proportional Microvolume Capacitive Liquid Level Sensor Array"; Proceedings of the 2005 IEEE; Engineering in Medicine and Biology 27th Annual Conference; Shanghai, China, Sep. 1-4, 2005; pp. 7258-7261.

Christopher P. Nemarich; "Time Domain Reflectometry Liuid Level Sensors"; IEEE Instrumentation & Measurement Magazine, Dec. 2001, pp. 40-44.

Gabor Vass; "The Principles of Level Measurement"; Sensors Magazine, vol. 17, Oct. 1, 2000.

R.M.A. Azzam; "Light-Reflection Liquid-Level Sensor"; IEEE Transactions on Instrumentation and Measurement, vol. 29, No. 2, Jun. 1980; pp. 113-115.

F. Lucklum, et al.; "Principle of a non-contact liquid level sensor using electromagentic-acoustic resonators"; Elektrotechnik and Informationstechnik, vol. 126, No. 1-2, Feb. 2009; pp. 3-4.

Annapurna Das, et al.; "Microwave Engineering"; Tata McGraw Hill Education Private Limited, Nagar, New Delhi, 2009.

* cited by examiner

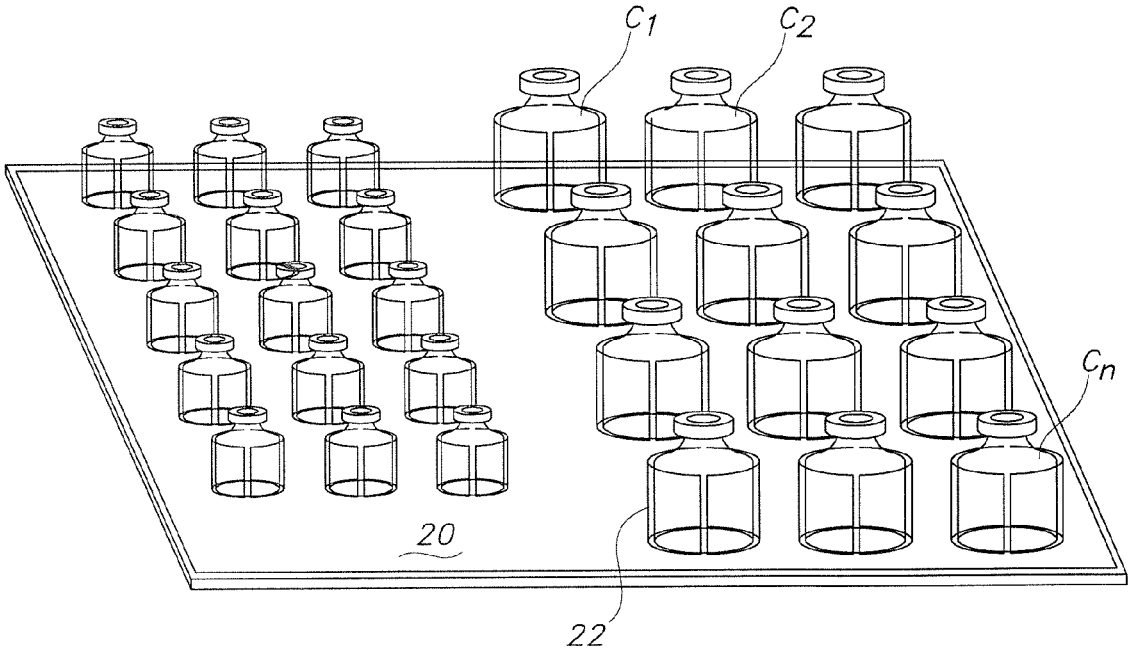

FIG. 1

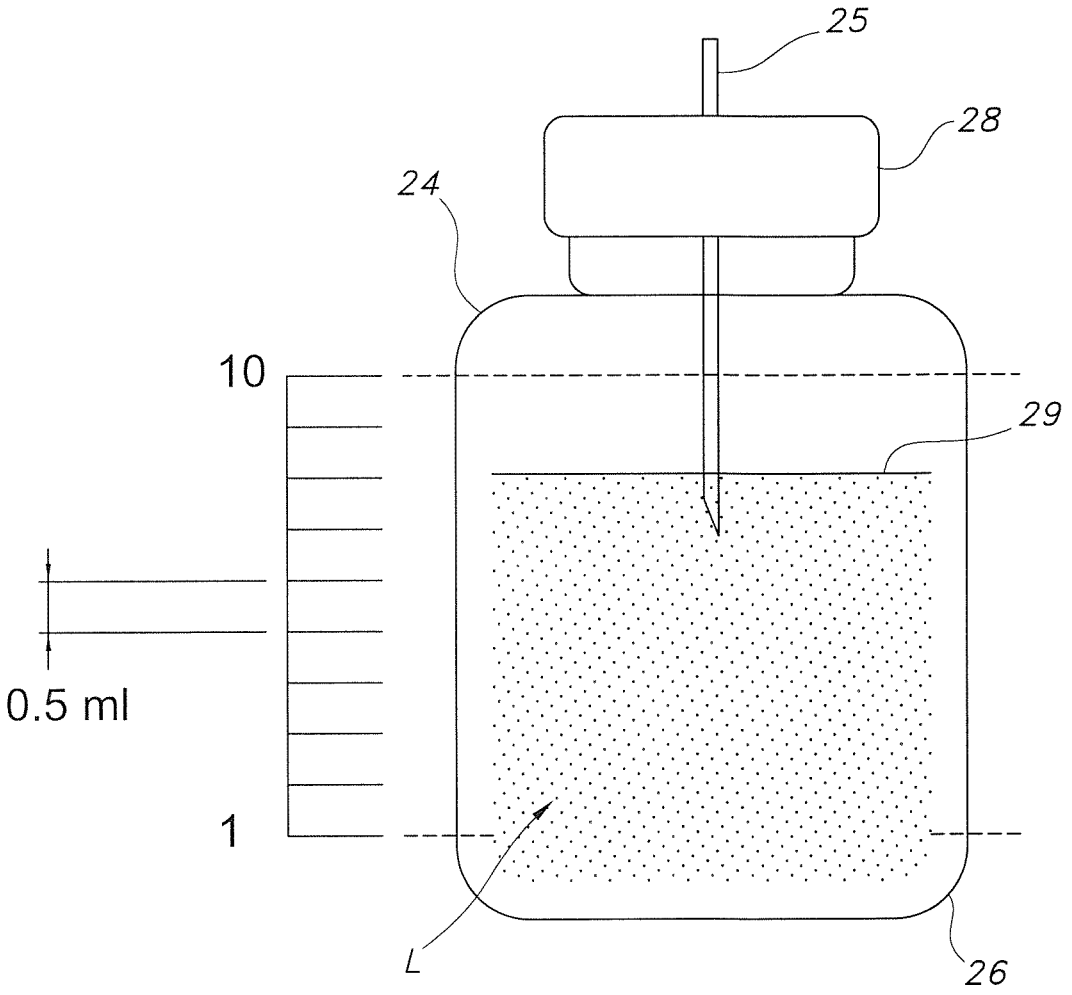

FIG. 2

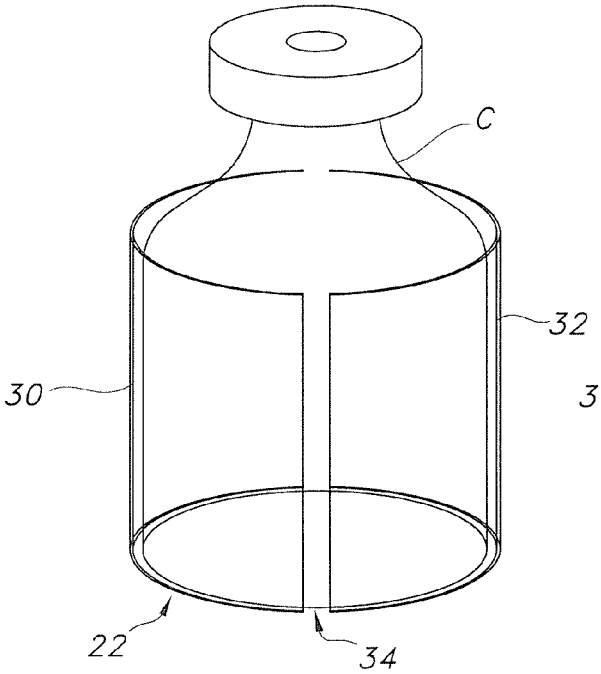

FIG. 3A

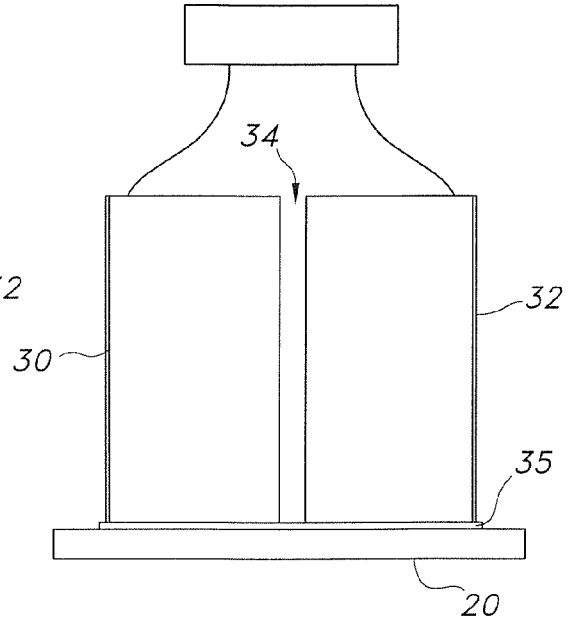

FIG. 3C

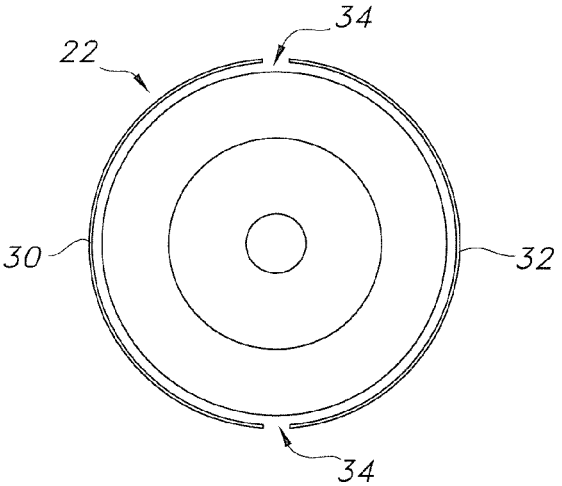

FIG. 3B

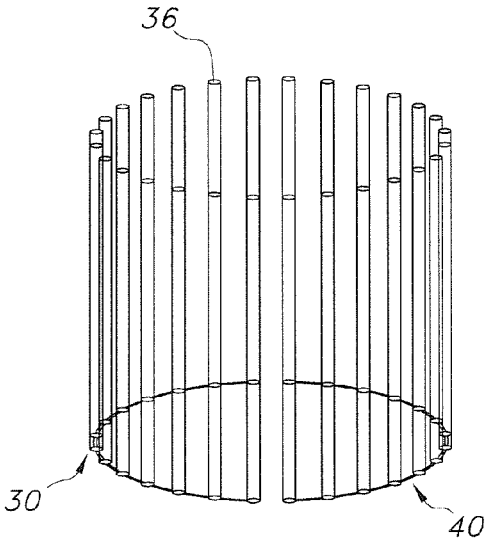

FIG. 4A

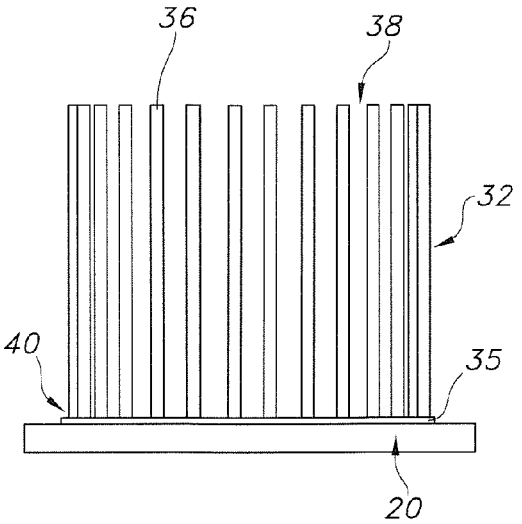

FIG. 4C

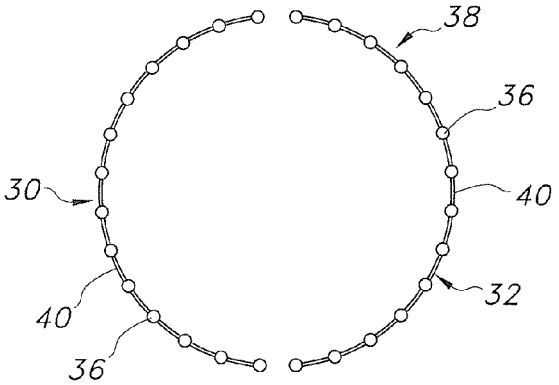

FIG. 4B

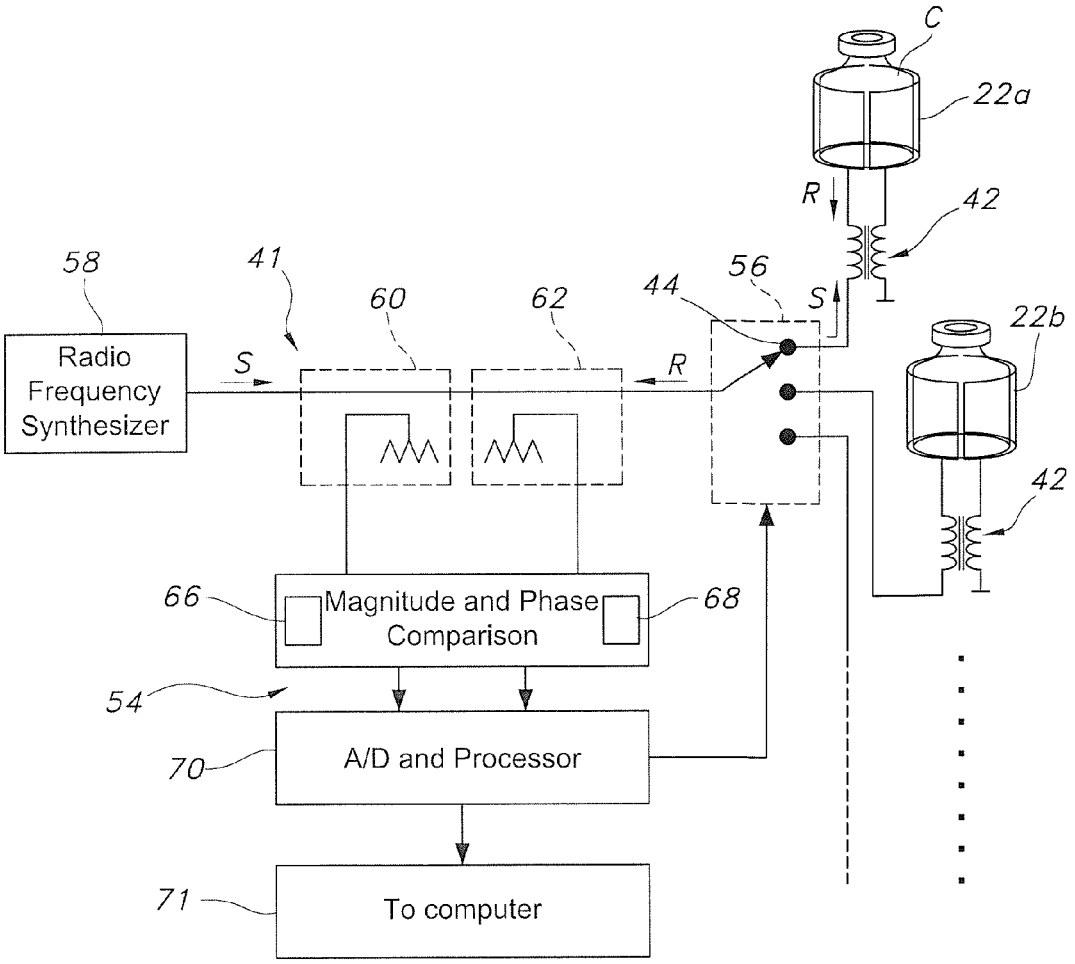
C
22a
R
42
58
41
60
62
44
56
S
22b
Radio Frequency Synthesizer
S
R
42
66
Magnitude and Phase Comparison
68
54
70
A/D and Processor
71
To computer

FIG. 5

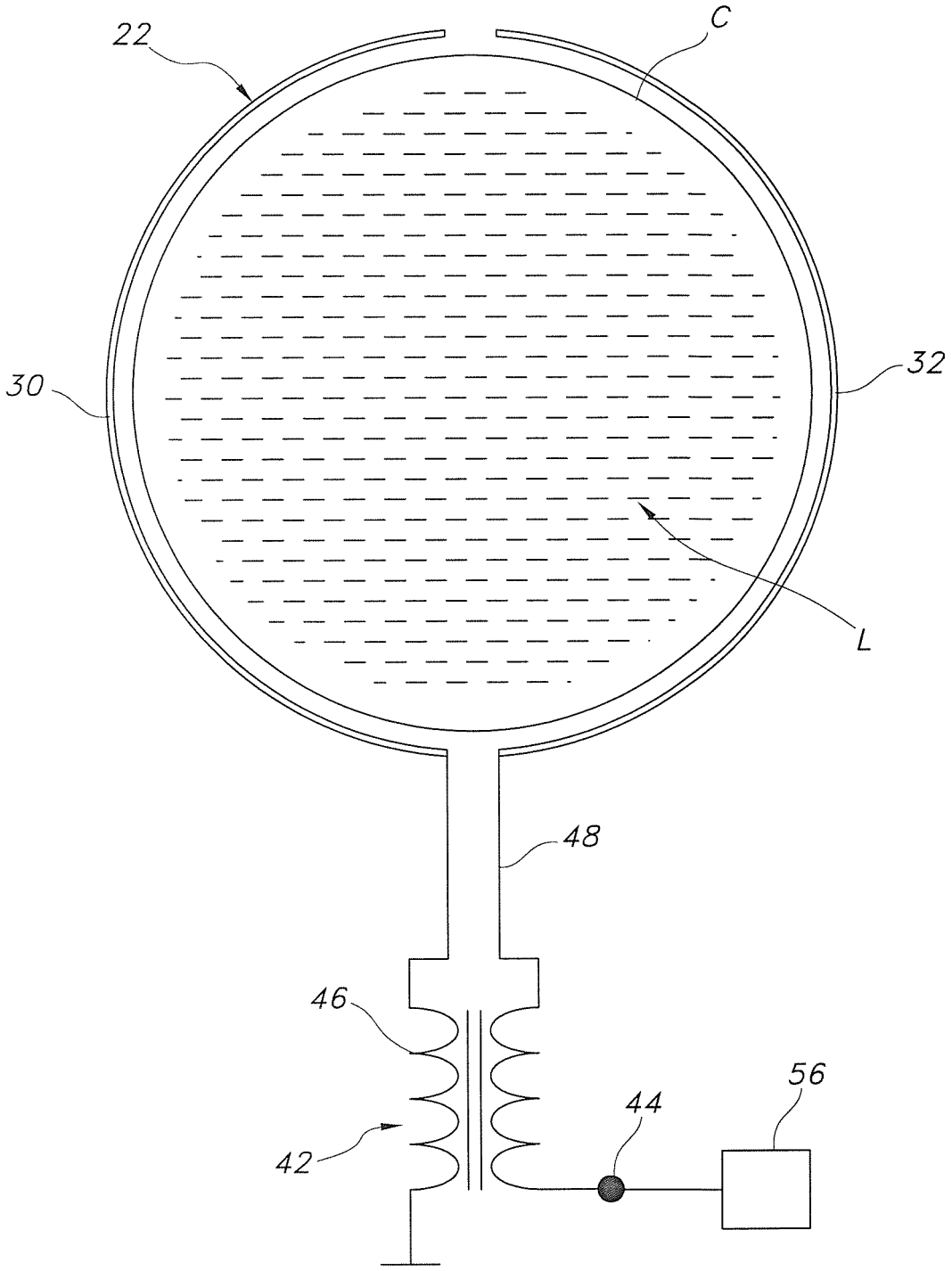

FIG. 6

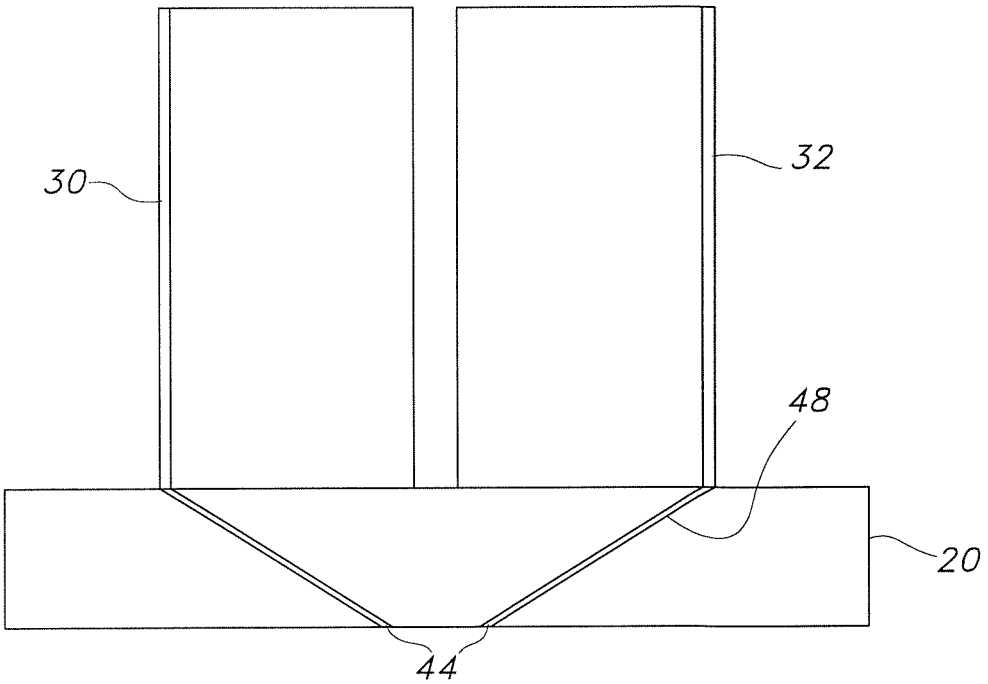

FIG. 7A

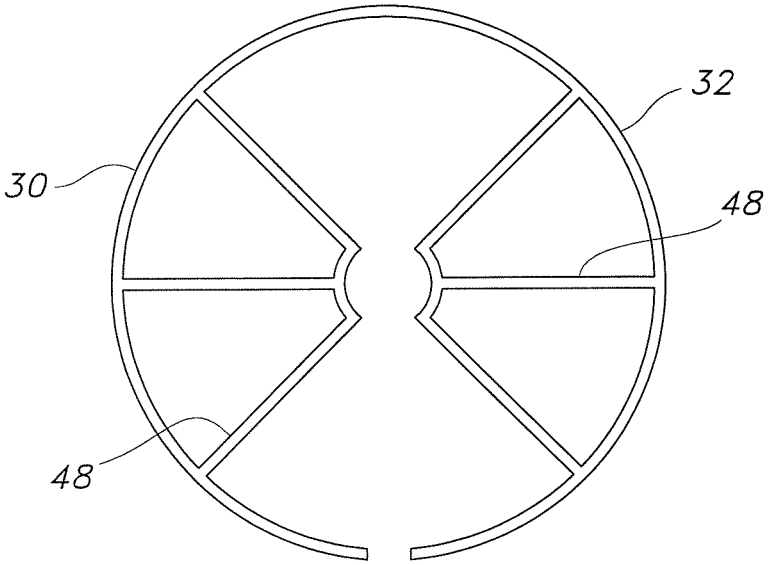

FIG. 7B

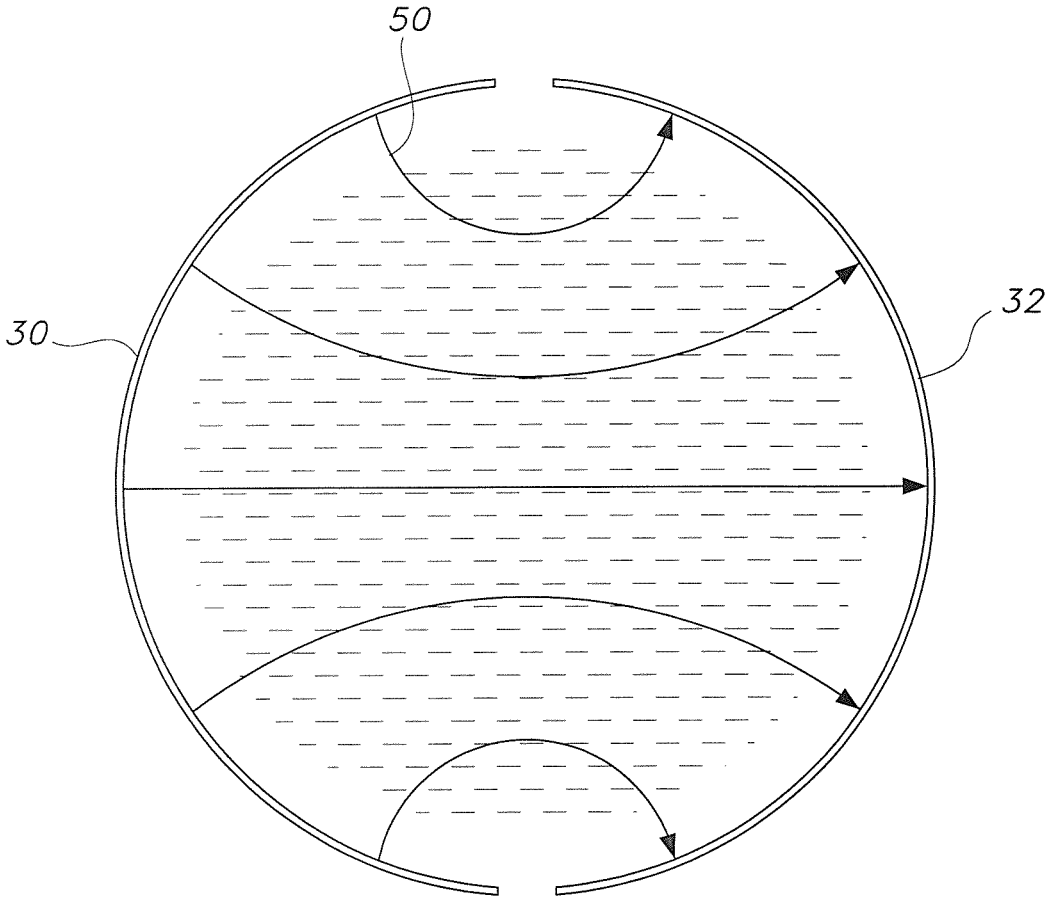

FIG. 8

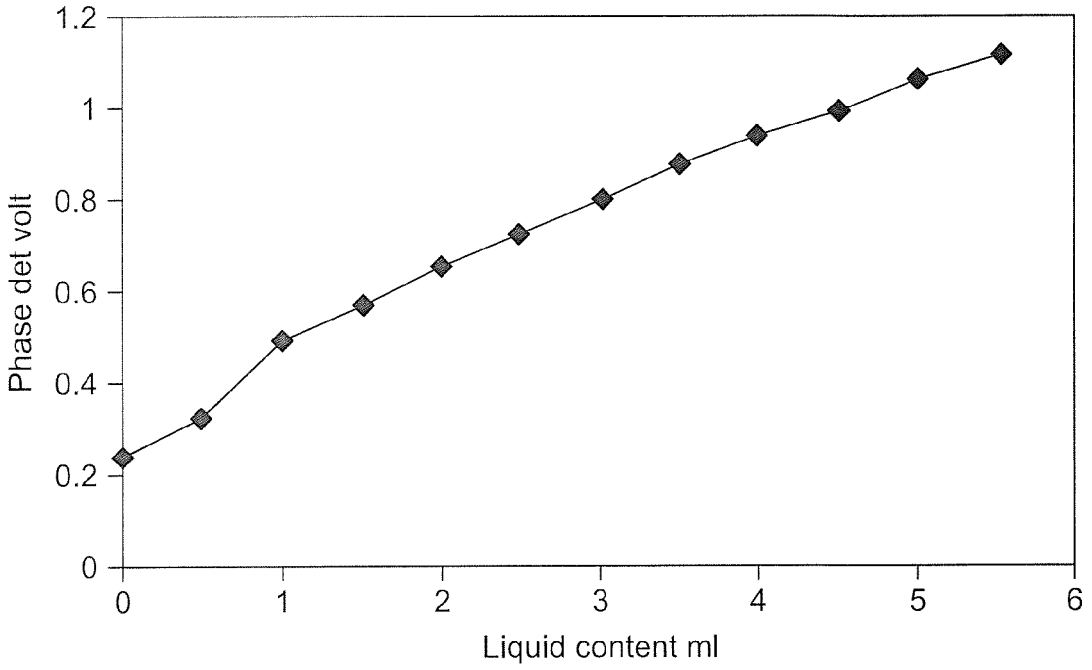

FIG. 9

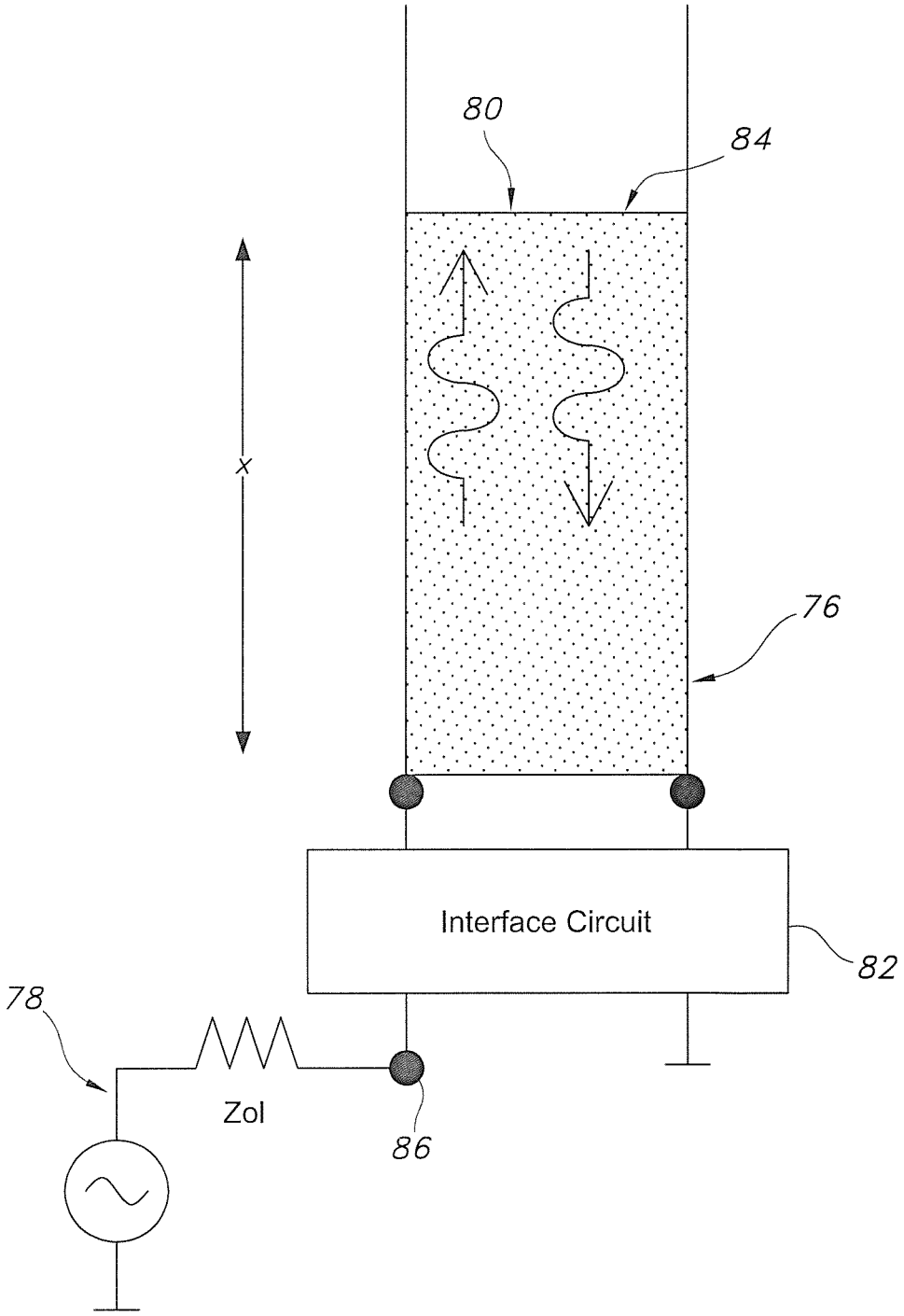

FIG. 10

NON-INVASIVE LIQUID LEVEL SENSING SYSTEM AND METHOD

This application claims the benefit of U.S. Provisional Patent Application Ser. No. 61/215,281, filed on May 4, 2009, the disclosure of which is incorporated herein by reference.

FIELD OF THE INVENTION

The present invention relates generally liquid level sensing; and more particularly to an apparatus and method for non-invasively sensing liquid levels in one or more containers in environments where it is desirable for the content of the containers not to be touched by a probe or the like.

BACKGROUND OF THE INVENTION

Liquid levels within containers, bottles, vials and similar holders utilized within the healthcare, industrial and numerous other industries often require non-invasive monitoring. A common example where such monitoring is required in the healthcare industry is in vaccine vials. Vaccine vials typically hold between 5 to 10 ml of liquid or vaccine therein. With a representative dosage of 0.5 ml, it would be beneficial to the medical practitioner to know whether the vaccine vial had enough liquid available to accommodate another 0.5 ml dose or whether a replacement vaccine vial should be ordered from a pharmacy or the like. Such monitoring could also be used to pre-order vaccine vials based on a typical amount of vaccine used in a given period.

In order to meet the needs of such monitoring requirements, a liquid level monitoring apparatus needs to be non-invasive and able to determine a liquid level with sufficient resolution to distinguish between a liquid level of 2.49 ml and 1.99 ml. Such an apparatus further needs to be able to monitor more than one vaccine vial at a time whether in a serial or parallel manner, and should not require any modification to the containers being monitored so as to accommodate as many industries as practical.

Since support trays are often used in a medical setting to support multiple vaccine vials containing the same or different vaccines, it would be beneficial if the amount of vaccine, i.e., the liquid level, in each of the multiple vaccine vials be could ascertained while positioned on the support trays. This would provide a medical practitioner the desired information concerning the amount of vaccine in a given vial in an economic and timely manner. In other words, it would be desirable for the medical practitioner to be able to either have the liquid levels available at any point, upon request, or at a designated time. Monitoring in this manner could be done for each of the vaccine vials essentially simultaneously or at least serially but within a very minimal amount of time.

Various liquid level monitoring apparatus are well known in the prior art. One such apparatus, for example, utilizes a capacitive probe attached with adhesive to a wall of a holding container. While affective in determining liquid levels, the use of such a probe to monitor a plurality of containers would require either the use of multiple probes at a considerable expense or for someone to physically remove the probe from one container and subsequently re-adhere the probe to the next in line container. This process would necessarily need to be repeated for each container each time liquid levels are desired to be known. Clearly, neither scenario seems workable or practical especially in today's real-time, cost conscious health care environments.

Even more, the above-referenced probe is by definition invasive. The probe must be inserted into the liquid. Further, the structure of the probe makes its ability to accurately determine a liquid level dependent on a thickness of a wall of the container. If the walls of the container are too thick, for instance, the probe may not be able to determine the liquid level with sufficient accuracy. In other words, the thickness of the container wall could cause only partial penetration in the container and not throughout the bulk of the liquid resulting in a lesser sensitivity than what may be required. This could lead to inaccurate liquid level determinations.

Other prior art apparatus are known to utilize slow-wave structures to measure liquid level and rely on the confinement of electromagnetic energy in a small volume. In one such apparatus, an electrodynamic element is placed outside of a container. However, fields generated by the electrodynamic element attain only partial penetration due to this positioning and do not penetrate through the bulk of the liquid. As a result, the apparatus is unlikely to provide consistent monitoring or a sufficient level of sensitivity in many applications.

Accordingly, a need exists for an apparatus and related method for non-invasively sensing liquid levels in one or more containers in environments where it is desirable for the content of the containers not to be touched by a probe or the like. In addition, the apparatus would preferably not require a specialized container in order to facilitate measurement of the liquid levels but would provide the ability to monitor the liquid level in any container irrespective of size or shape. Even more, the apparatus would be able to monitor and determine liquid levels in multiple containers without the need for multiple probes or devices, or for human intervention to move the apparatus from one container to another. All of the said features are provided by the following invention. Naturally, any improvements along such lines should contemplate good engineering practices, such as simplicity, ease of implementation, unobtrusiveness, stability, etc.

SUMMARY OF THE INVENTION

The present invention meets these needs by providing a non-invasive liquid level sensing system for monitoring the amount of liquid in at least one container. In accordance with a first aspect of the present invention, the apparatus includes a platform for supporting the at least one container, at least one holder associated with the at least one container supported by the platform, a source for generating a radio frequency signal, circuitry in communication with the at least one holder for transmitting the radio frequency signal through the at least one holder into the at least one container and receiving a portion of the radio frequency signal reflected at a liquid-air interface in the at least one container, and circuitry for processing the reflected radio frequency signal and determining the amount of liquid in the at least one container.

The at least one holder can be formed utilizing at least two sections having air gaps therebetween and can be mounted on a non-conducting substrate. Preferably, the at least two sections are substantially symmetrical and made of a conducting material. The platform supporting the at least one holder can be a non-conducting substrate or can merely support such a substrate. In addition, the at least two symmetrical conducting sections may be formed using a plurality of substantially parallel wires which are electrically shorted.

The transmitting circuitry includes a pair of couplers for receiving the radio frequency signal from the source and directing at least a portion of the radio frequency signal through a transformer to a transmission line electrically coupled to the at least one holder. A switch for selectively directing the at least a portion of the radio frequency signal to the at least one holder may likewise be utilized as part of the

transmitting circuitry. The switch may selectively direct the at least a portion of the radio frequency signal to each of the at least one holder at the same time or in a prescribed serial manner.

The pair of couplers also receives the reflected radio frequency signal and separates the reflected radio frequency signal from the radio frequency signal received from the source.

In addition, the processing circuitry includes a logarithmic amplifier for generating an output voltage proportional to a ratio of an amplitude of the reflected radio frequency signal and an amplitude of the radio frequency signal received from the source. A detector for generating an output voltage proportional to a difference in phase between the reflected radio frequency signal and the radio frequency signal received from the source, a converter for converting the ratio and the difference output voltages to digital voltages, and a processor for determining the amount of liquid in the at least one container utilizing the digital voltages likewise form parts of the processing circuitry.

In accordance another aspect of the present invention, a non-invasive method for sensing the amount of liquid in at least one container is provided. At least one container is supported within at least one holder on a platform. A radio frequency signal is transmitted to the at least one holder, and a return radio frequency signal reflected at a liquid-air interface in the at least one container is received. The reflected return radio frequency signal is indicative of the amount of liquid in the at least one container. Upon receipt of the reflected return radio frequency signal, a magnitude and a phase of the transmitted radio frequency signal and the return signal are determined. The amount of liquid in the at least one container which is dependent upon the phase of the transmitted signal and the return signal is also calculated. The calculated amount of liquid can be further refined utilizing the magnitude of the transmitted signal and the return signal. In addition, audible and/or visual warnings can be generated when the amount of liquid in the at least one container is less than a predetermined amount for example. Of course, such warnings could indicate other parameters depending on the environment in which the apparatus or method are utilized.

In accordance with yet another aspect of the present invention, further refinement of the calculated amount of liquid can be attained by transmitting a second radio frequency signal having a different frequency than the original signal to the at least one holder. This step is followed by repeating the steps of receiving a second return radio frequency signal reflected at the liquid-air interface in the at least one container, determining a magnitude and a phase of the second radio frequency signal and the second reflected return signal, and calculating the amount of liquid in the at least one container dependent upon the phase of the second radio frequency signal and the second reflected return signal. Last, the step of optimizing the calculated amount of liquid in the at least one container utilizing the amount of liquid in the at least one container dependent upon the phase of the second signal and the second return signal may be made.

These and other embodiments of the present invention will be set forth in the description which follows, and in part will become apparent to those of ordinary skill in the art by reference to the following description of the invention and referenced drawings or by practice of the invention. The claims, however, indicate the particularities of the invention.

BRIEF DESCRIPTION OF THE DRAWINGS

The accompanying drawings incorporated in and forming a part of the specification, illustrate several aspects of the present invention, and together with the description serve to explain the principles of the invention. In the drawings:

FIG. **1** is an isometric view of an exemplary platform supporting a plurality of holders having a plurality of containers associated therewith;

FIG. **2** is a plan view of a typical container having liquid therein which forms a liquid level at a liquid-air interface;

FIG. **3***a* is an isometric view of an exemplary container associated with a holder;

FIG. **3***b* is a top view of the exemplary container associated with the holder as shown in FIG. **3***a;*

FIG. **3***c* is a front view of the exemplary container associated within the holder as shown in FIG. **3***a* showing an air gap between sections of the holder;

FIG. **4***a* is an isometric view of an alternate embodiment of a holder made of substantially parallel wires;

FIG. **4***b* is a top view of the alternate embodiment holder in FIG. **4***a* showing the substantially parallel wires electrically shorted together;

FIG. **4***c* is a front view of the alternate embodiment holder in FIG. **4***a* showing an air gap between sections of the holder;

FIG. **5** is a circuit diagram showing transmitting and processing circuitry and a switching mechanism for directing signals to and from a plurality of holders;

FIG. **6** is a circuit diagram showing a transmission circuit electrically connected to a holder associated with an exemplary container;

FIG. **7***a* is a cross-sectional view of an alternate embodiment platform having a transmission circuit contained therein;

FIG. **7***b* is a cross-sectional view of the alternate embodiment platform showing the transmission circuit contained therein from a bottom view perspective;

FIG. **8** is a top view of an exemplary holder showing an electric field travelling through a liquid inside a container;

FIG. **9** is a chart graphically depicting changing liquid levels inside a container dependent upon phase voltage and liquid content; and

FIG. **10** is a circuit diagram depicting a simplified transmission line model.

DETAILED DESCRIPTION OF THE PREFERRED EMBODIMENT

In the following detailed description of the illustrated embodiments, reference is made to the accompanying drawings that form a part hereof, and in which is shown by way of illustration, specific embodiments in which the invention may be practiced. These embodiments are described in sufficient detail to enable those skilled in the art to practice the invention and like numerals represent like details in the various figures. Also, it is to be understood that other embodiments may be utilized and that process, mechanical, electrical, arrangement, software and/or other changes may be made without departing from the scope of the present invention. In accordance with the present invention, methods and apparatus are hereinafter described for monitoring the amount of liquid in at least one container utilizing a non-invasive liquid level sensing system.

With reference to FIG. **1**, a representative platform **20** for supporting one or more containers (C_1, C_2 . . . C_n) in one or more holders **22** is shown. Each container (C) in an array of containers is supported by the platform **20** and associated with a separate or individualized holder **22**. In accordance with the broad teaching of the present invention, the containers (C_1, C_2 . . . C_n) can be any size or shape and might be a variety of different sizes and shapes depending on the indus-

try within which the containers are utilized. The containers ($C_1, C_2 \ldots C_n$) are constructed from a non-conducting material (e.g., glass, plastic, etc.). Similarly, the holders **22** can be designed to accommodate the different sizes and shapes of the containers ($C_1, C_2 \ldots C_n$).

In the healthcare industry, for example, containers which may be utilized with the present invention include vaccine vials of the form shown in FIG. **2**. These containers often assume the form of vials **24** which are capable of holding several milliliters of liquid (L) or vaccine. Each vial **24** typically contains up to 10 ml of liquid (L), as graphically represented adjacent the vial **24**, which provides multiple doses of liquid (L). Each dose is typically on the order of 0.5 ml.

As further shown in FIG. **2**, the vial **24** includes a body **26** for holding the liquid (L) and a top **28** having a rubber dam barrier (not shown) or the like therein. A sterile syringe **25** is typically used to breach the rubber dam barrier and remove a desired amount of the liquid (L). The desired amount is typically one dose, which in this example is 0.5 ml of liquid (L) as is graphically represented adjacent the vial **24**. The sterile syringe **25** containing a dose of the vaccine is then removed from the rubber dam barrier and is ready to inject into a recipient. As is well known, the sterile syringe and rubber dam barrier are specifically designed to prevent contamination of the liquid (L) within the vial **24**. In order to avoid such contamination and the need for sterilization of probes or the like, the apparatus of the present invention operates in a non-invasive manner to sense the level of liquid remaining in the vial **24**, or container (C).

As noted above, each container (C) is associated with its own holder **22**. This is shown best shown in FIGS. **3***a*, **3***b*, and **3***c*. In FIG. **3***a*, a representative embodiment of a container (C) associated with a holder **22** is shown. The holder **22** is preferably constructed from a conducting material (e.g. copper, aluminum, steel, etc.). The mechanical construction of the holder **22** is such that the container (C) can be inserted and removed therefrom with minimal effort by the operator.

As shown in FIGS. **3***a* and **3***c*, the holder **22** may only partially enclose the container (C). In other words, a portion of the container (C) may extend above the holder **22** and the relative height of the holder **22** and container (C) may vary significantly. While this is acceptable and facilitates easy removal of the container (C) and accommodation of various containers by the same apparatus, the liquid (L) in the container (C) is preferably positioned within the physical limits of the holder **22** in order to more accurately sense the liquid level. In accordance with the broad teaching of the present invention, however, the liquid (L) in the container (C) or at least a portion thereof can be positioned outside of the holder **22**. Generally speaking, the holders shown herein are the present preferred embodiments of the invention and should in no way be considered to be restrictive to this particular geometry. In essence, the holders **22** can be modified to accommodate any size and shape of container.

In the present embodiment, the holder **22** is generally constructed from two substantially symmetrical conducting sections **30**, **32**. The two sections **30**, **32** forming the holder **22** are not connected however. Rather, ends of the two sections **30**, **32** create air gaps **34** there between. In this embodiment, the sections **30**, **32** are formed of solid sheets. Alternate embodiments are available, however, as will be discussed in more detail below. As best shown in FIG. **3***c*, the holder **22** is mounted on a non-conducting substrate **35**. In accordance with the broad teachings of the present invention, the platform **20** may itself be made utilizing a non-conducting substrate or may merely support such a substrate **35** as shown here.

In another embodiment of the present invention shown in FIGS. **4***a*, **4***b*, and **4***c*, the holder **22**, and more specifically, the two substantially symmetrical conducting sections **30**, **32** can be formed using a plurality of substantially parallel wires **36**. As best shown in FIGS. **4***b* and **4***c*, the individual wires **36** within the sections **30**, **32** form air gaps **38** there between. Although having such gaps in between, the wires **36** are also electrically shorted along within their respective conducting sections **30**, **32** utilizing a wire or other conducting material **40**.

This alternate embodiment of the present invention is permissible as surface currents flow in the direction of propagation of the wave with only negligible transverse components. Further, the use of wires to form the conducting sections provides certain advantages over steel sheets, for example, including lower cost, lighter weight, greater mechanical flexibility and increased overall sensitivity. Even more, the embodiment discourages transverse surface currents and propagation of higher order modes which could adversely affect sensing results.

As shown in FIG. **5**, the holder **22** and more specifically, the conducting sections **30**, **32** are electrically coupled to or in communication with a transmitting circuit **41** which will be described in more detail below. FIG. **5** further depicts an overall circuit diagram showing the transmitting circuit **41** and processing circuit **54**, and a switch **56** for directing signals to and from a plurality of holders **22***a*, **22***b* . . . **22***n*. A source for generating a radio frequency signal is shown at **58**.

In the present embodiment, the source **58** is a radio frequency synthesizer. The frequency of the radio frequency signal used to monitor the amount of liquid in the containers can be varied and selection of a particular frequency is at least dependent upon the dimensions of the container being monitored among other factors as is known in the art. For example, a container having a dimension on the order of an inch or so, typically utilizes a frequency of a few hundred MHz (e.g., 250 MHz). Other sizes of containers benefit from utilization of higher and lower frequency signals as is known in the art.

As shown in FIG. **5**, the radio frequency signal (S) generated by source **58** is an unbalanced radio frequency signal which travels through a pair of directional couplers **60**, **62**, a single pole, double throw (SPNT) switch **56**, to a feedpoint **44**. An interface circuit **42** is selectively connected at the feedpoint **44** to a holder. In this figure, the selected holder **22** is labeled with numeral **22***a*.

The interface circuit **42**, as shown in FIG. **6**, includes a transformer **46** and a transmission line **48** coupled to conducting sections **30**, **32** of holder **22**. In this embodiment, the transformer **46** is a balanced to unbalanced transformer which is commonly referred to as a balun. Advantageously, this arrangement ensures that surface currents flow only along inner surfaces of the conducting sections **30**, **32**, i.e., the surfaces which face the container (C). A balanced transmission line **48** is utilized to connect the transformer **46** to conducting sections **30**, **32**. In accordance with the broad teachings of the present invention, other methods of connecting the radio frequency signal to the conducting sections **30**, **32** are understood in the art and could be utilized in lieu of the present embodiment.

Once the signal (S) reaches the holder **22**, the signal is propagated along the holder **22** and through the container (C) and liquid (L) and is reflected at a liquid-air interface **29** (shown in FIG. **2**) in the container. The reflected radio frequency signal (R) is returned to the directional couplers **60**, **62** through the same electrical path it used to reach the liquid-air interface **29**.

The directional couplers **60**, **62** receive the reflected radio frequency signals (R) and separate the transmitted radio frequency signals (T) from the reflected radio frequency signals (R) for further processing within the processing circuit **54**. Therein, the transmitted radio frequency signals and the reflected radio frequency signals are compared.

In the present embodiment, the processing circuit **54** includes logarithmic amplifiers **66** and detectors **68** for generating a first output voltage (V_{1out}) (magnitude and phase) proportional to a ratio of an amplitude of the reflected radio frequency signal (R) and an amplitude of the radio frequency signal received from the source **58**. The processing circuit **54** further includes detectors **68** for generating a second output voltage (V_{2out}) (magnitude and phase) proportional to a difference in phase between the reflected radio frequency signal (R) and the radio frequency signal received from the source **58**, and a converter **70** for converting the ratio and the difference output voltages (V_{1out}, V_{2out}) to digital voltages. The digitized voltages are subsequently provided to a processor or computer **71** for determining the amount of liquid in the container **22**. In accordance with the broad teaching of the present invention, the digitized voltages or an amount of liquid in the container **22** may be stored in a memory device in or associated with the processor **71** and may be further displayed by a display or the like (not shown).

FIGS. **7***a* and **7***b* show an alternate embodiment of the present invention wherein the interface circuit **42** is placed within the platform **20**. In these figures, the transformer **46** is not shown in order to emphasize the fact that the radio frequency signal is connected to the conducting sections **30**, **32** via transmission lines **48**. With this arrangement, excitation is carried out from the bottom of the platform **20** upward. This alternate embodiment, though more complex to implement, can provide a higher level of sensitivity of measurement which may be required for a particular application or industry. The balanced feeding points **44** are connected to a transformer (not shown) as described above and receive the radio frequency signal (S) generated by source **58** via interface circuit **42** as described above.

FIG. **8** shows electrical field lines for transverse electromagnetic or TEM excitation penetrating throughout a liquid (L). The direction of signal or wave propagation is perpendicular to the plane of the paper. Electrical rather than magnetic fields are important to consider as the dielectric constant of the liquid is the parameter that impacts the phase of a wave reflected from the liquid-air interface used to determine the amount of liquid (L) in the container.

EXAMPLE

FIG. **9** is a chart graphically depicting experimental results obtained using a holder **22** similar to that shown in FIG. **3** with an excitation circuit similar to that shown in FIG. **6**. The chart shows the changing liquid level inside a container dependent upon a phase voltage and liquid. In this experiment, the excitation frequency of the radio frequency generating source **58** was 500 MHz. The couplers **60**, **62** were part number ZX 30-20-4 manufactured by Mini-Circuit, and the magnitude/phase detectors were part number AD8302 manufactured by Analog Devices. The container (C) was made of plastic and had a diameter of 24 mm and a wall thickness of about 1 mm. Water was added in steps of 0.5 ml and voltages proportional to the phase difference of transmitted and reflected radio frequency waves were recorded. It was observed from this data that the relationship between the phase difference and the water level was generally linear and possessed a sufficient precision to successfully resolve or note changes in the amount of fluid in steps of 0.5 ml. The magnitude information was used to enhance the accuracy further by reducing impairments such as the directivity of the coupler.

Principle of Operation:

A simplified theory of operation based on a transmission line model shown in FIG. **10** is now presented. A more rigorous treatment will, however, involve analytical or numerical solutions of electromagnetic field equations, especially at the interface of the excitation circuit and the holder **22**.

Referring to FIG. **10**, the container (C) enclosed by the holder **22** can be modeled as an open circuit balanced transmission line **76** of characteristic impedance Zo**2**. The transmission line **76** is driven from an environment with characteristic impedance Zo**1** identified generally by numeral **78** (usually 50Ω). The transmission line **76** is a reasonable model when TEM propagation takes place. The effect of a stub **80**, to a first approximation, can be considered negligible. For simplicity, the effect of the interface circuit **42** (described in detail in FIG. **6**) between Zo**1** and the open circuit transmission line **76**, are also considered negligible. Unless properly designed, the effect of the interface circuit **42** can be appreciable and will adversely impact the measurement sensitivity. It is possible to de-embed the effect of the interface circuit **42**, however, if necessary.

The transmitted signal travels through the transmission line **76** and is reflected back at the liquid-air interface **84**. The reflected signal travels back through the transmission line **76** and the interface circuit **82** and is available at feed point **86** in the form of a reflected signal.

Let x, shown in FIG. **10**, be a length of the dielectric material, i.e., the liquid being monitored. Strictly speaking, the dielectric inside the transmission line **76** is not homogenous (a combination of the liquid and the dielectric material used to construct the container); however, from symmetry considerations an effective dielectric constant ϵ_r may be defined.

The input reactance of a lossless open circuited line is:

$$Z(x) = -jZo2 \cdot \cot(\beta x) \tag{1}$$

$$\text{Where } \beta = \text{propagation function} = (2\pi/c) \cdot (\text{RADICAL})(\epsilon_r) \cdot f \tag{2}$$

c=speed of light in free space

f=frequency

The reflection coefficient at the feed point **1009** is given by:

$$\Gamma = \frac{-j \cdot Zo2 \cdot \cot(\beta x) - Zo1}{-j \cdot Zo2 \cdot \cot(\beta x) + Zo1} \tag{3}$$

The magnitude of Γ is unity and the phase ϕ is given by:

$$\phi = \arg(\Gamma) = 2 \cdot \arctan\left[(Zo2/Zo1) \cdot \cot\left[(2\pi/c)(\text{RADICAL})(\epsilon_r) \cdot f \cdot x\right] + \pi\right. \tag{4}$$

Therefore, equation (4) describes the relationship between a depth of liquid x and a phase of the reflection coefficient. It is to be noted that the open circuit transmission line **76** is not necessarily capacitive, but could be inductive depending on liquid level x.

The sensitivity may be defined as $|d\phi/dx|$ and can be shown to be constant and equal to β when Zo**1**=Zo**2**. If Zo**1**≧Zo**2**, then the sensitivity is greater than β for $\beta x \leqq \pi/2$. On the other hand, if Zo**1**≦Zo**2**, the sensitivity is greater than β for $\beta x \geqq \pi/2$.

Therefore, to attain higher sensitivity, there is a motivation to operate at an impedance environment Zo**1** higher than Zo**2** when $\beta x \leqq \pi/2$ is satisfied. If such a condition related to Zo**1**

and Zo**2** cannot be satisfied, two or more frequencies may be used to optimize sensitivities over the entire range of liquid levels.

In accordance with the method of the present invention, a non-invasive method for sensing the amount of liquid in at least one container is provided. At least one container (C) is supported within at least one holder **22** on a platform **20**. A radio frequency signal (S) is transmitted to the at least one holder **22**, and a return radio frequency signal (R) reflected at a liquid-air interface **29** in the at least one container is received. The reflected return radio frequency signal (R) is indicative of the amount of liquid (L) in the at least one container **22**. Upon receipt of the reflected return radio frequency signal (R), a magnitude and a phase of the transmitted radio frequency signal (S) and the return signal are determined. The amount of liquid (L) in the at least one container **22** which is dependent upon the phase of the transmitted signal (S) and the return signal (R) is also calculated. The calculated amount of liquid can be further refined utilizing a magnitude of the transmitted signal (S) and the return signal (R). In addition, audible and/or visual warnings can be generated when the amount of liquid in the at least one container **22** is less than a predetermined amount for example. Of course, such warnings could indicate other parameters depending on the environment in which the apparatus or method are utilized.

A further refining step wherein the calculated amount of liquid can be refined may be attained by transmitting a second radio frequency signal having a different frequency than the original signal to the at least one holder. This step is followed by repeating the steps of receiving a second return radio frequency signal reflected at the liquid-air interface **29** in the at least one container **22**, determining a magnitude and a phase of the second radio frequency signal and the second reflected return signal, and calculating the amount of liquid in the at least one container **22** dependent upon the phase of the second radio frequency signal and the second reflected return signal. Last, the step of optimizing the calculated amount of liquid in the at least one container **22** utilizing the amount of liquid in the at least one container dependent upon the phase of the second signal and the second return signal may be made.

Ultimately, skilled artisans should recognize at least the following advantages. Namely, they should appreciate that the foregoing supports non-invasively measuring liquid levels in one or more containers without the need for specialized containers. The invention also provides the ability to monitor the liquid level in any container irrespective of size, shape or material, and even in multiple containers without the need for multiple probes or human intervention to move an apparatus from one container to another. All of the said features are provided by the following invention. Naturally, any improvements along such lines should contemplate good engineering practices, such as simplicity, ease of implementation, unobtrusiveness, stability, etc.

The foregoing has been described in terms of specific embodiments, but one of ordinary skill in the art will recognize that additional embodiments are possible without departing from its teachings. This detailed description, therefore, and particularly the specific details of the exemplary embodiments disclosed, is given primarily for clarity of understanding, and no unnecessary limitations are to be implied. Modifications will become evident to those skilled in the art upon reading this disclosure and may be made without departing from the spirit or scope of the invention. Relatively apparent modifications, of course, include combining the various features of one or more figures with the features of one or more of the other figures.

The invention claimed is:

1. A non-invasive liquid level sensing system for monitoring the amount of liquid in at least one container comprising:

a platform for supporting the at least one container;

at least one holder associated with said at least one container supported by said platform;

a source for generating a radio frequency signal;

circuitry in communication with said at least one holder for transmitting the radio frequency signal through said at least one holder into the at least one container and receiving a portion of the radio frequency signal reflected at a liquid-air interface in the at least one container; and

circuitry for processing the reflected radio frequency signal and determining the amount of liquid in the at least one container.

2. The non-invasive liquid level sensing system of claim **1** wherein said at least one holder includes at least two conducting sections having air gaps therebetween, said at least two sections mounted on a non-conducting substrate.

3. The non-invasive liquid level sensing system of claim **2** wherein said at least two sections are substantially symmetrical and formed using a plurality of substantially parallel and electrically shorted wires; and

said platform is a non-conducting substrate.

4. The non-invasive liquid level sensing system of claim **1** wherein said transmitting circuitry includes a pair of couplers for receiving the radio frequency signal from said source and directing at least a portion of the signal through a transformer to a transmission line electrically coupled to said at least one holder.

5. The non-invasive liquid level sensing system of claim **4** further comprising a switch for selectively directing the at least a portion of the signal to said at least one holder.

6. The non-invasive liquid level sensing system of claim **5** wherein said switch selectively directs the at least a portion of the signal to each of said at least one holder in parallel.

7. The non-invasive liquid level sensing system of claim **4** wherein said at least one holder includes at least two substantially symmetrical conducting sections having air gaps therebetween, said at least two sections mounted on a non-conducting substrate; and

further comprising a switch for directing the at least a portion of the signal to one or more of said at least one holder.

8. The non-invasive liquid level sensing system of claim **4** wherein said pair of couplers receives the reflected radio frequency signal and separates the reflected radio frequency signal from the radio frequency signal received from said source; and

wherein said processing circuitry includes a logarithmic amplifier for generating an output voltage proportional to a ratio of an amplitude of the reflected radio frequency signal and an amplitude of the radio frequency signal received from said source, a detector for generating an output voltage proportional to a difference in phase between the reflected radio frequency signal and the radio frequency signal received from said source, a converter for converting the ratio and the difference output voltages to digital voltages, and a processor for determining the amount of liquid in the at least one container utilizing the digital voltages.

9. A non-invasive sensing system for monitoring the amount of liquid in a plurality of containers comprising:

a platform for supporting the plurality of containers;

a holder supported by said platform for each of said plurality of containers, said holder including substantially symmetrical conducting sections separated by air gaps;

a source for generating a radio frequency signal;

directional couplers for directing the radio frequency signal to interface circuits connected to said plurality of holders and for receiving radio frequency signals reflected at liquid-air interfaces in the plurality of containers; and

processing circuitry for determining the amount of liquid in the plurality of containers.

10. The non-invasive sensing system of claim **9** wherein said at least two substantially symmetrical conducting sections of said holder are a plurality of substantially parallel wires, said wires are electrically shorted and have air gaps therebetween.

11. The non-invasive sensing system of claim **10**, wherein said at least two symmetrical conducting sections are mounted on a non-conducting substrate.

12. The non-invasive sensing system of claim **11**, wherein said platform is a non-conducting substrate.

13. The non-invasive sensing system of claim **9**, wherein said interface circuits include a transformer to ensure that surface currents flow only in an inner surface of said at least two symmetrical conducting sections of said holder, and a balanced transmission line electrically coupling said transformer to said holder.

14. The non-invasive sensing system of claim **13**, wherein said interface circuits further include a switch for selectively directing the radio frequency signal to said transformer.

15. The non-invasive sensing system of claim **14** wherein said at least two substantially symmetrical conducting sections of said holder are a plurality of substantially parallel wires, said wires are electrically shorted and have air gaps therebetween.

16. A non-invasive method for sensing the amount of liquid in at least one container comprising the steps of:

supporting the at least one container within at least one holder on a platform;

transmitting a radio frequency signal to said at least one holder;

receiving a return radio frequency signal reflected at a liquid-air interface in the at least one container, said return signal indicative of the amount of liquid in the at least one container;

determining a magnitude and a phase of the transmitted radio frequency signal and the return signal; and

calculating the amount of liquid in the at least one container dependent upon the phase of the transmitted signal and the return signal.

17. The method as claimed in claim **16**, wherein the step of calculating the amount of liquid in the at least one container includes the step of refining the calculated amount of liquid utilizing the magnitude of the transmitted signal and the return signal.

18. The method as claimed in claim **17**, further comprising the step of generating a warning when the amount of liquid in the at least one container is less than a predetermined amount.

19. The method as claimed in claim **18**, wherein the warning is audible or visual.

20. The method as claimed in claim **16**, further comprising the step of transmitting a second radio frequency signal having a different frequency to said at least one holder;

repeating the step of receiving a return radio frequency signal reflected at a liquid-air interface in the at least one container, said second reflected return signal indicative of the amount of liquid in the at least one container;

repeating the step of determining a magnitude and a phase of the second radio frequency signal and the second reflected return signal; and

calculating the amount of liquid in the at least one container dependent upon the phase of the second radio frequency signal and the second reflected return signal.

* * * * *